DS-2DE4A225IW-DE
2 MP 25× Network IR PTZ Camera

Hikvision DS-2DE4A225IW-DE 2 MP 25× Network IR PTZ Camera adopts 1/2.8" progressive scan CMOS chip. With the 25× optical zoom lens, the camera offers more details over expansive areas.

This series of cameras can be widely used for wide ranges of high-definition, such as the rivers, forests, roads, railways, airports, ports, squares, parks, scenic spots, stations and large venues, etc.

Key Features

- 1/2.8" progressive scan CMOS
- Up to 1920 × 1080 resolution
- Min. illumination:
  Color: 0.005 Lux @(F1.6, AGC ON)
  B/W: 0.001 Lux @(F1.6, AGC ON)
  0 Lux with IR
- 25× optical zoom, 16× digital zoom
- 120 dB WDR, 3D DNR, HLC, BLC
- Up to 50 m IR distance
- 12 VDC & PoE+ (802.3 at, class4)
- Support H.265+/H.265 video compression

Specification

Camera Module	
Image Sensor	1/2.8" progressive scan CMOS
Min. Illumination	Color: 0.005 Lux @(F1.6, AGC ON) B/W: 0.001 Lux @(F1.6, AGC ON) 0 Lux with IR
White Balance	Auto/Manual/ATW (Auto-tracking White Balance)/Indoor/Outdoor/Fluorescent Lamp/Sodium Lamp
AGC	Auto/Manual
Shutter Time	1/1 s to 1/30,000 s
Day & Night	IR Cut Filter
Digital Zoom	16×
Privacy Mask	24 programmable privacy masks
Focus Mode	Auto/Semi-automatic/Manual
WDR	120 dB WDR
Lens	
Focal Length	4.8 mm to 120 mm, 25× optical
Zoom Speed	Approx. 3.2 s (optical lens, wide-tele)
FOV	Horizontal field of view: 57.6° to 2.5° (wide-tele) Vertical field of view: 34.4° to 1.4° (wide-tele) Diagonal field of view: 64.5° to 2.9° (wide-tele)
Working Distance	10 mm to 1500 mm (wide-tele)
Aperture Range	F1.6 to F3.5
IR	
IR Distance	50 m
Smart IR	Support
PTZ	
Movement Range (Pan)	360° endless
Pan Speed	Configurable, from 0.1°/s to 300°/s Preset Speed: 350°/s
Movement Range (Tilt)	From -5° to 90° (auto-flip)
Tilt Speed	Configurable, from 0.1°/s to 160°/s Preset Speed: 200°/s
Proportional Zoom	Support
Presets	300
Patrol Scan	8 patrols, up to 32 presets for each patrol
Pattern Scan	4 pattern scans, record time over 10 minutes for each scan
Power-off Memory	Support
Park Action	Preset/Pattern Scan/Patrol Scan/Auto Scan/Tilt Scan/Random Scan/Frame Scan/Panorama Scan
PTZ Position Display	Support
Preset Freezing	Support
Scheduled Task	Preset/Pattern Scan/Patrol Scan/Auto Scan/Tilt Scan/Random Scan/Frame Scan/Panorama Scan/Dome Reboot/Dome Adjust/Aux Output
Compression Standard	
Video Compression	Main Stream: H.265+/H.265/H.264+/H.264 Sub-Stream: H.265/H.264/MJPEG Third Stream: H.265/H.264/MJPEG
H.264 Type	Baseline Profile/Main Profile/High Profile
H.264+	Support
H.265 Type	Main Profile

H.265+	Support
Video Bitrate	32 Kbps to 16384 Kbps
Audio Compression	G.711alaw/G.711ulaw/G.722/G.726/MP2L2/PCM
Audio Bitrate	64 Kbps (G.711)/16 Kbps (G.722.1)/16 Kbps (G.726)/32 Kbps to 160 Kbps (MP2L2)
SVC	Support
Smart Feature	
Basic Event Detection	Motion Detection, Video Tampering Detection, Alarm Input, Alarm Output, Exception
Smart Detection	Audio Exception Detection, Face Detection, Intrusion Detection, Line Crossing Detection, Region Entrance Detection, Region Exiting Detection, Unattended Baggage Detection, Object Removal Detection
Smart Tracking	Manual Tracking, Auto Tracking, Event Tracking
ROI encoding	Main stream, sub-stream, and third stream respectively support four fixed areas.
Smart Record	ANR (Automatic Network Replenishment), Dual-VCA
Image	
Max. Resolution	1920 × 1080
Main Stream	50Hz: 25fps (1920 × 1080, 1280 × 960, 1280 × 720) 50fps (1920 × 1080, 1280 × 960, 1280 × 720) 60Hz: 30fps (1920 × 1080, 1280 × 960, 1280 × 720) 60fps (1920 × 1080, 1280 × 960, 1280 × 720)
Sub-Stream	50Hz: 25fps (704 × 576, 640 × 480, 352 × 288) 60Hz: 30fps (704 × 480, 640 × 480, 352 × 240)
Third Stream	50Hz: 25fps (1920 × 1080, 1280 × 960, 1280 × 720, 704 × 576, 640 × 480, 352 × 288) 60Hz: 30fps (1920 × 1080, 1280 × 960, 1280 × 720, 704 × 480, 640 × 480, 352 × 240)
Image Enhancement	HLC/BLC/3D DNR/Defog/EIS/Regional Exposure/Regional Focus
Network	
Network Storage	Built-in memory card slot, support Micro SD/SDHC/SDXC, up to 256 GB; NAS (NPS, SMB/ CIPS), ANR
Alarm Linkage	Alarm actions, such as Memory Card Video Record, Trigger Recording, Notify Surveillance Center, Upload to FTP/Memory Card/NAS, Send Email, etc.
Protocols	IPv4/IPv6, HTTP, HTTPS, 802.1x, Qos, FTP, SMTP, UPnP, SNMP, DNS, DDNS, NTP, RTSP, RTCP, RTP, TCP/IP, UDP, IGMP, ICMP, DHCP, PPPoE, Bonjour
API	Open-ended, support ONVIF, ISAPI, and CGI, support HIKVISION SDK and Third-Party Management Platform
Simultaneous Live View	Up to 20 channels
User/Host	Up to 32 users. 3 levels: Administrator, Operator and User
Security Measures	User authentication (ID and PW), Host authentication (MAC address); HTTPS encryption; IEEE 802.1x port-based network access control; IP address filtering
Client	iVMS-4200, iVMS-4500, iVMS-5200, Hik-Connect
Web Browser	IE 8 to 11, Chrome 31.0 to 44, Firefox 30.0 to 51
Interface	
Audio Interface	1-ch audio input and 1-ch audio output
Alarm Interface	2-ch alarm input and 2-ch alarm input
Network Interface	1 RJ45 10 M/100 M Ethernet Interface; PoE+ (802.3 at, class4)
General	
Power	12 VDC & PoE+ (802.3 at, class4), Max.:18 W (IR Max.5 W)
Working Temperature	-30°C to 65°C (-22°F to 149°F)
Working Humidity	≤ 90%
Protection Level	IP66 Standard, TVS 4000V Lightning Protection, Surge Protection and Voltage Transient Protection
Material	ADC12, PC, PC+ABS, SUS304, POM
Dimensions	Φ 169 mm × 161 mm (Φ 6.65" × 6.34")
Weight	Approx. 2.45 kg (5.40 lb)

Order Model

DS-2DE4A225IW, 12 VDC & PoE+ (802.3 at, class4)

Dimensions

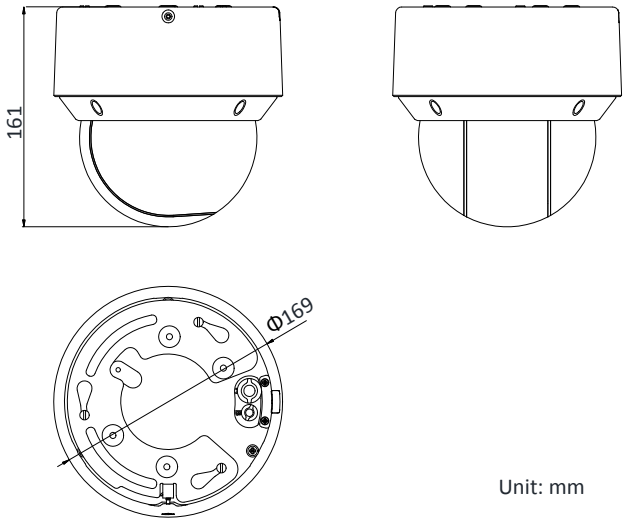

Unit: mm

Accessories

	DS-1605ZJ	Wall Mounting Bracket
	DS-1671ZJ-SD11	In-ceiling Mounting Bracket
	DS-1280ZJ-SD11	Junction Box
	DS-1691ZJ-(M)(L)	Pendant Mounting Bracket
	DS-1100KI	Network Keyboard
	DS-1005KI	USB Joy-stick

Distributed by

HIKVISION

Headquarters
No.555 Qianmo Road, Binjiang District,
Hangzhou 310051, China
T +86-571-8807-5998
overseasbusiness@hikvision.com

Hikvision USA
T +1-909-895-0400
sales.usa@hikvision.com

Hikvision Europe
T +31-23-55-42-770
info.eu@hikvision.com

Hikvision Middle East
T +971-4-8816086
salesme@hikvision.com

Hikvision Russia
T +7-495-669-67-99
saleru@hikvision.com

Hikvision India
T +91-22-28469900
sales@pramahikvision.com

Hikvision Italy
T +39-0438-6902
info.it@hikvision.com

Hikvision France
T +33(0)1-85-330-450
info.fr@hikvision.com

Hikvision Spain
T +34-91-737-16-55
info.es@hikvision.com

Hikvision Poland
T +48-22-460-01-50
poland@hikvision.com

Hikvision UK
T +01628-902140
support.uk@hikvision.com

Hikvision Singapore
T +65-6684-4718
sg@hikvision.com

Hikvision Oceania
T +61-2-8599-4233
salesau@hikvision.com

Hikvision Canada
T +1-909-895-0400
sales.usa@hikvision.com

Hikvision Korea
T +82-31-731-8841
sales.korea@hikvision.com

Hikvision Brazil
T +55 11 3318-0050
Latam.support@hikvision.com

Hikvision Africa
T +27 (10) 0351172
sale.africa@hikvision.com

Hikvision Hong Kong
T +852-2151-1761

© Hikvision Digital Technology Co., Ltd. 2017 | Data subject to change without notice | 0505111071214